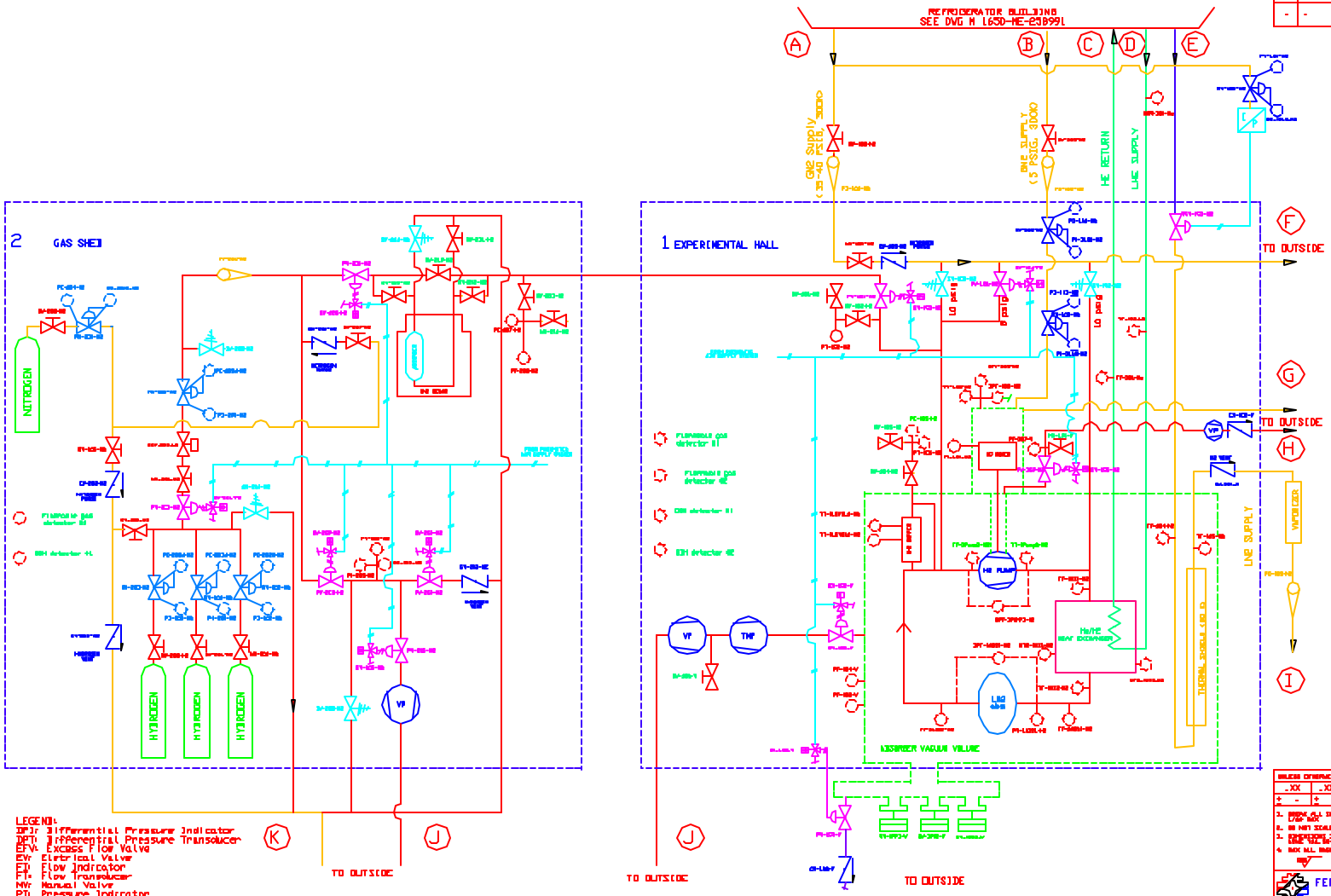

LEGEND:
DPI: Differential Pressure Indicator
DPT: Differential Pressure Transducer
EFV: Excess Flow Valve
EV: Electrical Valve
FI: Flow Indicator
FT: Flow Transducer
MV: Manual Valve
PI: Pressure Indicator
PRV: Pressure Regulating Valve
PT: Pressure Transducer
PV: Pneumatic Valve
TCV: Temperature Controlled Valve
TT: Temperature Transducer
FRONTSV: Safety Valve

NOTES:
1 - ALL SYMBOLS CONFORM TO ANSI/ISA S5.1-1984(R1992) STANDARDS UNLESS OTHERWISE SPECIFIED.

REV	DESCRIPTION	DRAWN / DATE
-	-	APPROVED / DATE - -

UNLESS OTHERWISE SPECIFIED .XX .XXX ANGLES ± - ± - ± -	DESIGNATOR	C. DARVE	4.1.02
	DRAWN	Robert Hubard	4.1.02
1. BREAK ALL SHARP EDGES 0.06 MAX	CHECKED	-	-
2. DO NOT SCALE DRAWING	APPROVED	-	-
3. DIMENSIONS SHOWN IN BRACKETS ARE REF	USED ON	-	
4. BOX ALL BARE SURFACES REF	MATERIAL	-	

FERMI NATIONAL ACCELERATOR LABORATORY
UNITED STATES DEPARTMENT OF ENERGY

BEAMS CRYOGENIC SYSTEMS MUCOOL LINAC TEST FLOW SCHEMATIC

SCALE	FOLDER	DRAWING NUMBER	REV
-		1650-MD-381033	-

CREATED WITH I-DEAS 6.2

-- REDUCED COPY - DO NOT SCALE --